Module3

Computer Graphics

- Projections- Parallel and Perspective projections.

Three-Dimensional Viewing

- Generating a 3-D scene is similar to taking a photograph

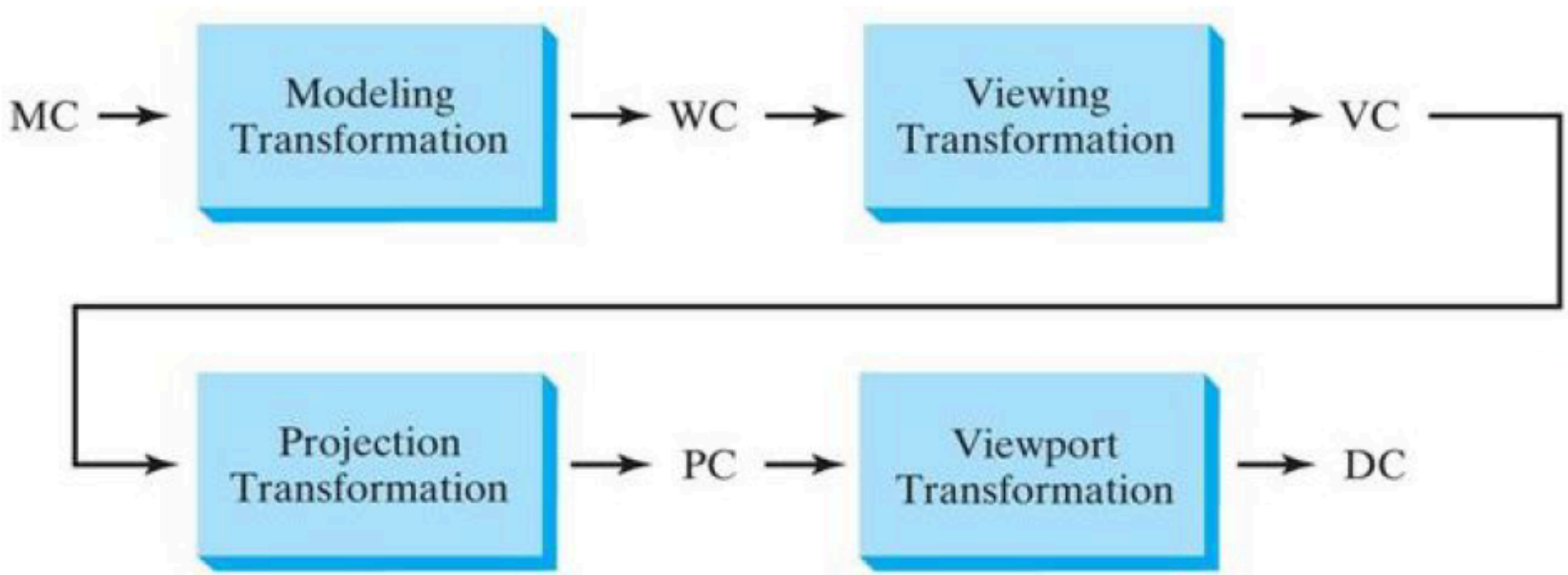

Projections

- Transform 3D objects on to a 2D plane using ***Projections***
- 2 types of Projections
  - ***Parallel***
  - ***Perspective***

Parallel Projections

- In Parallel projection, coordinate positions are transformed to the view plane along parallel lines

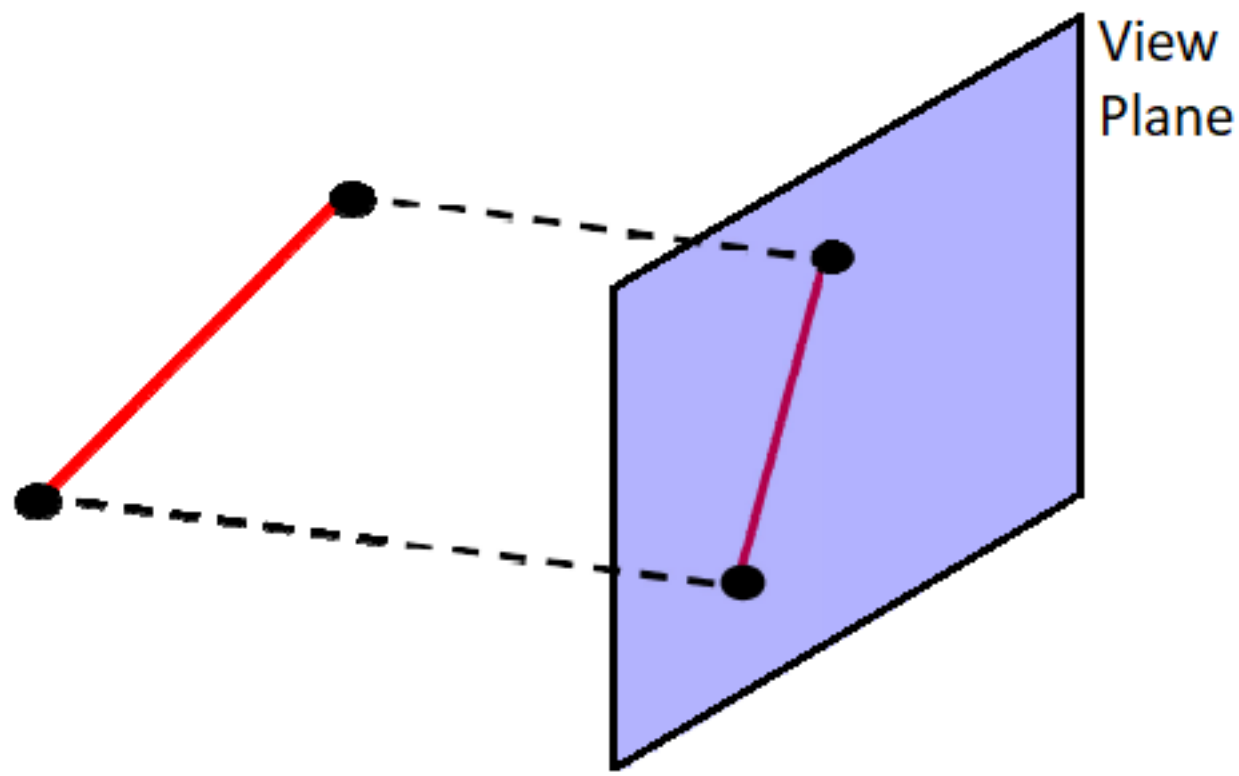

Perspective Projections

- In perspective projection, object position are transformed to the view plane along lines that converge to a point called projection reference point (center of projection)

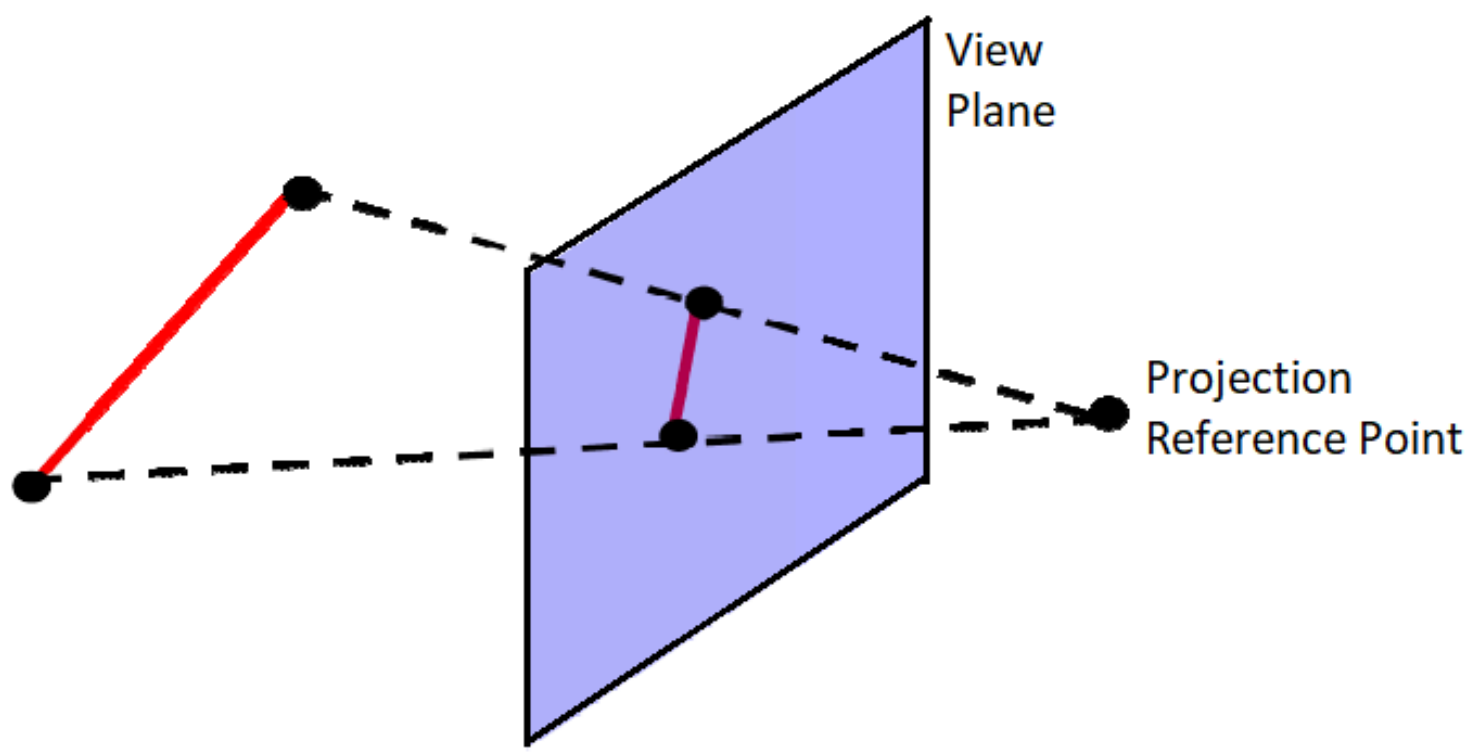

Perspective Projections

- Produces realistic views but does not preserve relative proportions
- Projection of a distant object are smaller than the projection of objects of the same size that are closer to the projection plane

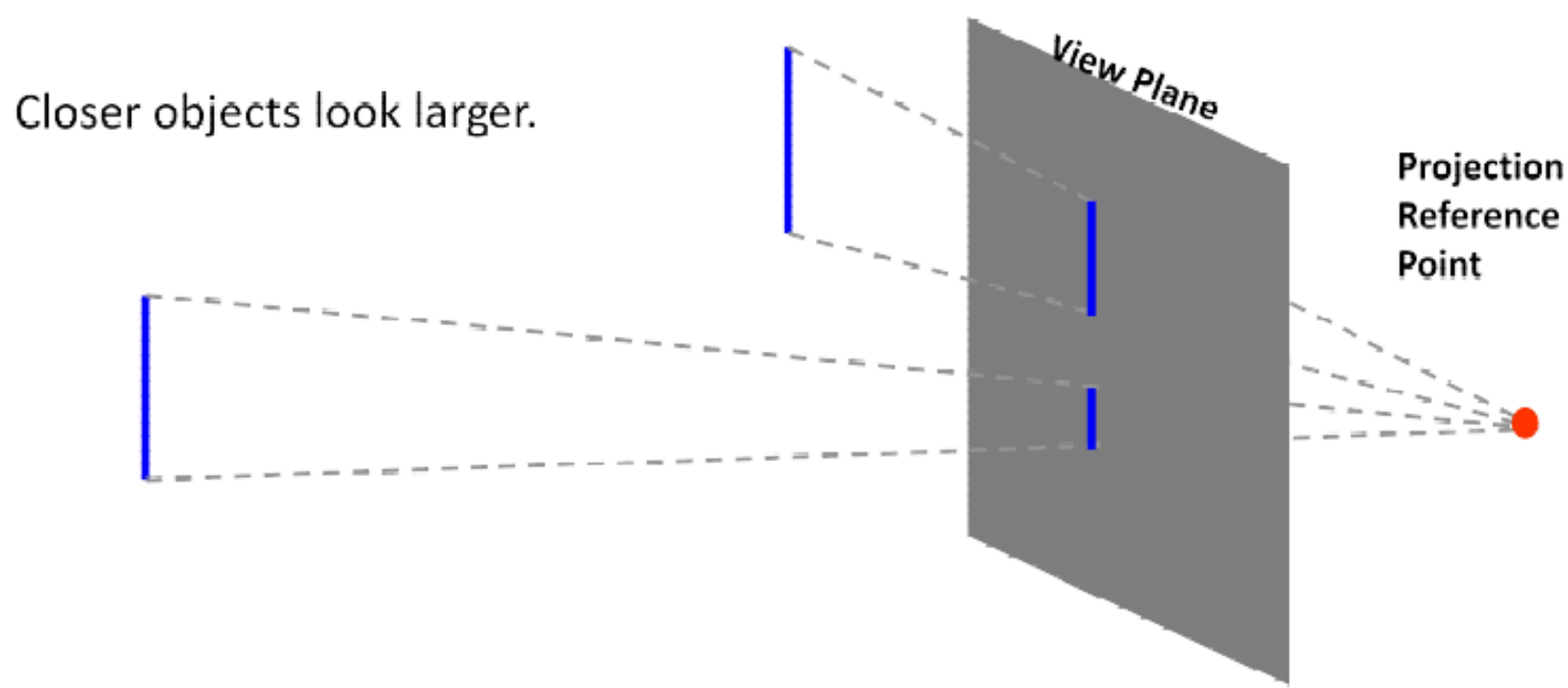

Parallel Projection

- It preserves relative proportion of object.
- Accurate views of the various sides of an object are obtained with a parallel projection.
- Does not give a realistic representation of the appearance of a three-dimensional object.

Parallel Projections

- We can define a parallel projection with a projection vector, V_p that defines the direction for the projection lines.
- 2 types:
  - **Orthographic :** when the projection is perpendicular to the view plane.
  - **Oblique :** when the projection is not perpendicular to the view plane.

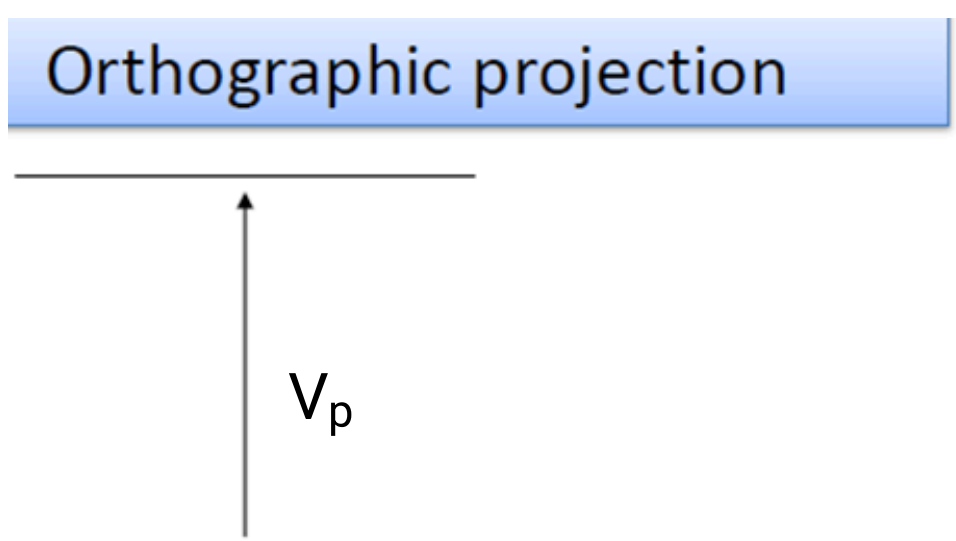

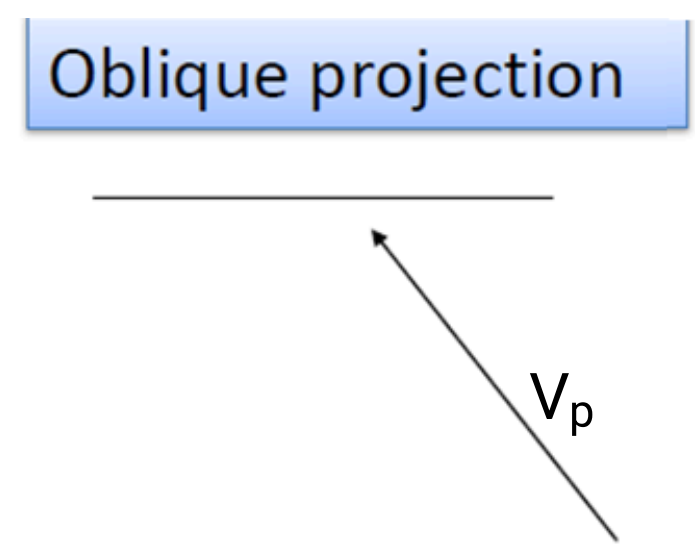

Orthographic projections

Orthographic projection produce front, side and rear views of an object

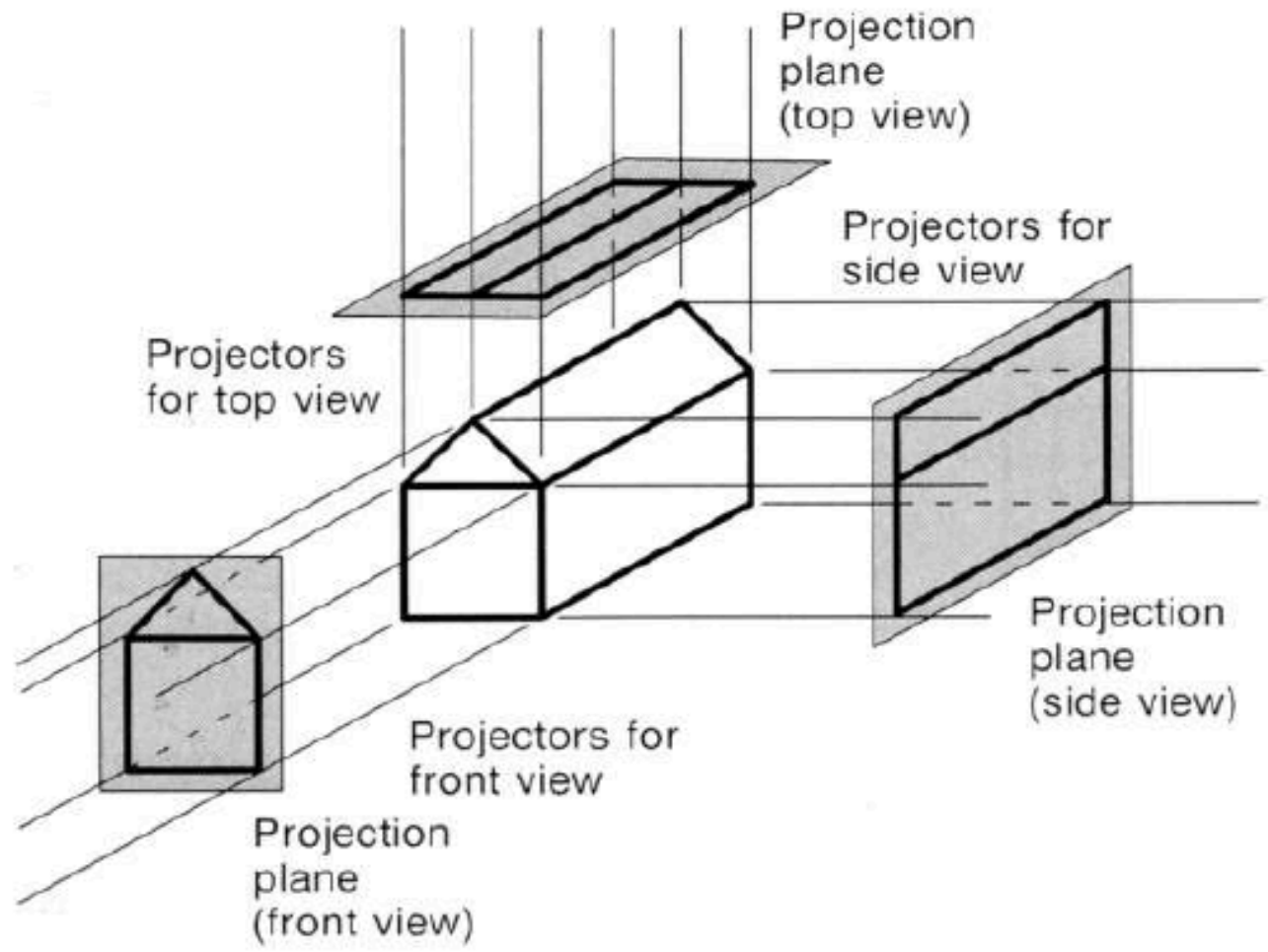

Orthographic projections

- Front, side and rear orthographic projection of an object are called **elevations** and the top orthographic projection is called **plan view.**

Orthographic Projection

- Orthographic projections that *show more than one face of an object are called* ***Axonometric orthographic projections.***
- Three varieties:
  - **Isometric**
  - **Dimetric**
  - **Trimetric**

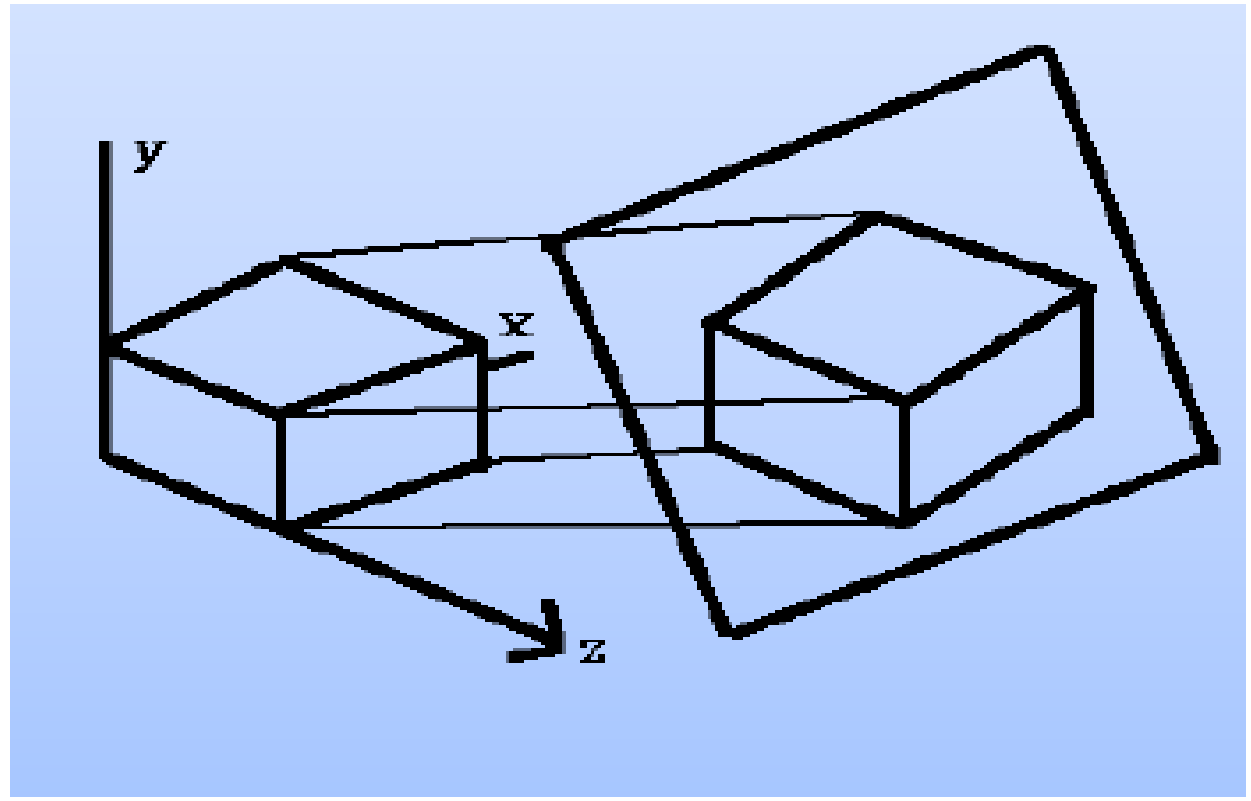

Types of Axonometric Projection

Isometric projection

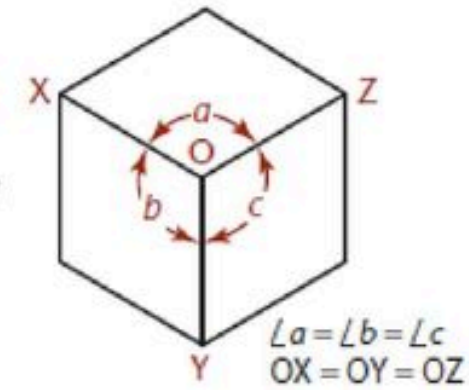

(a) Isometric

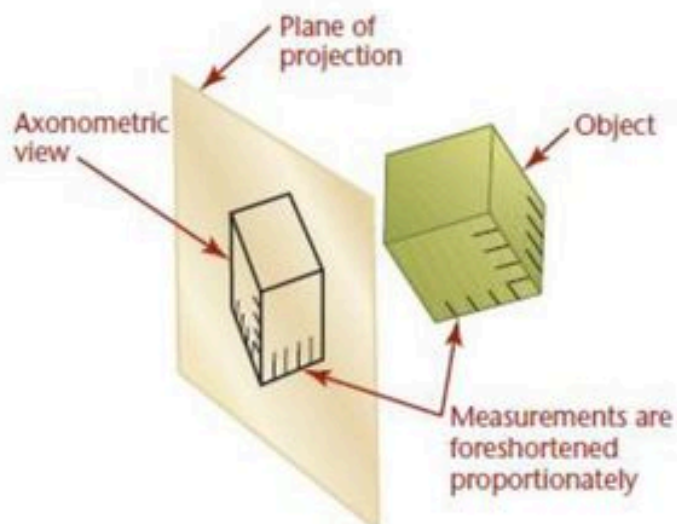

Dimetric projection

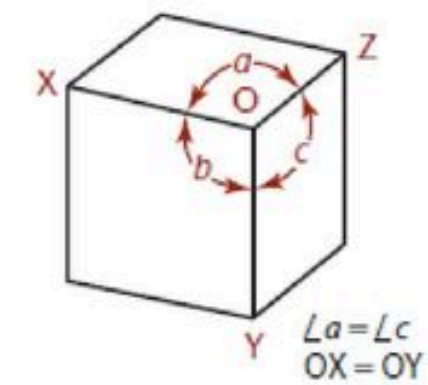

(b) Dimetric

The degree of ***foreshortening of any line depends on its angle*** to the plane of projection. The greater the angle, the greater the foreshortening. If the degree of foreshortening is determined for each of the three edges of the cube that meet at one corner, scales can be easily constructed for measuring along these edges or any other edges parallel to them

Trimetric projection

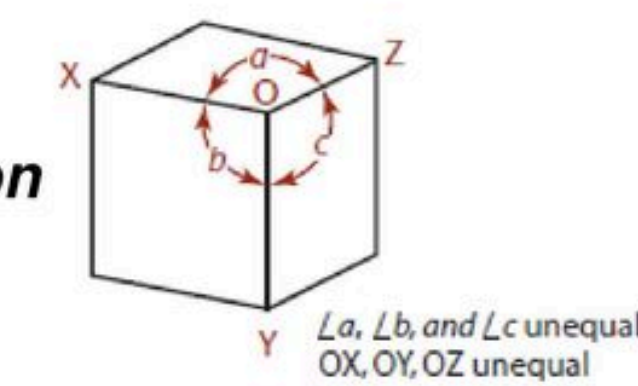

(c) Trimetric

Axonometric projections

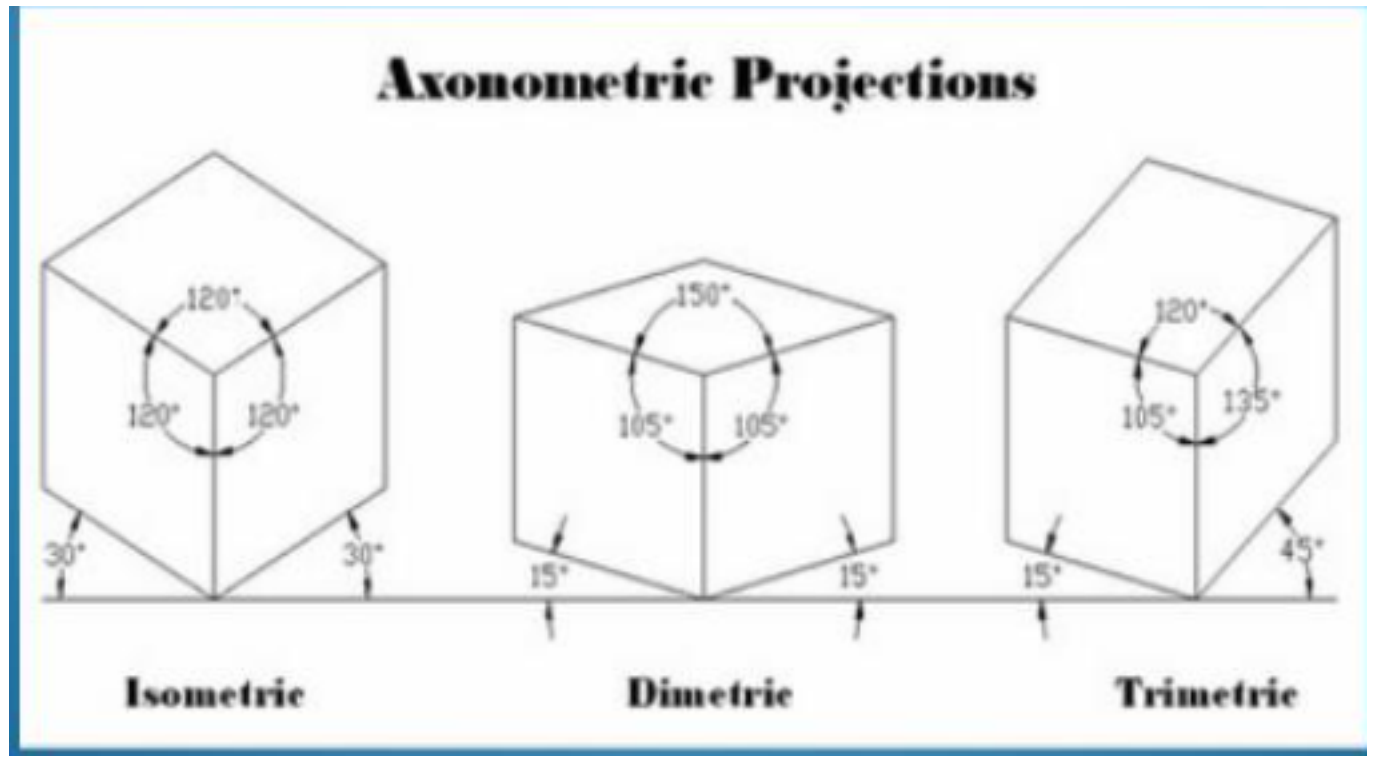

1. **Isometric:** In Isometric, we can represent the three-dimensional objects into two-dimensional drawings visually. The Angle between the two co-ordinate is 120 degrees.

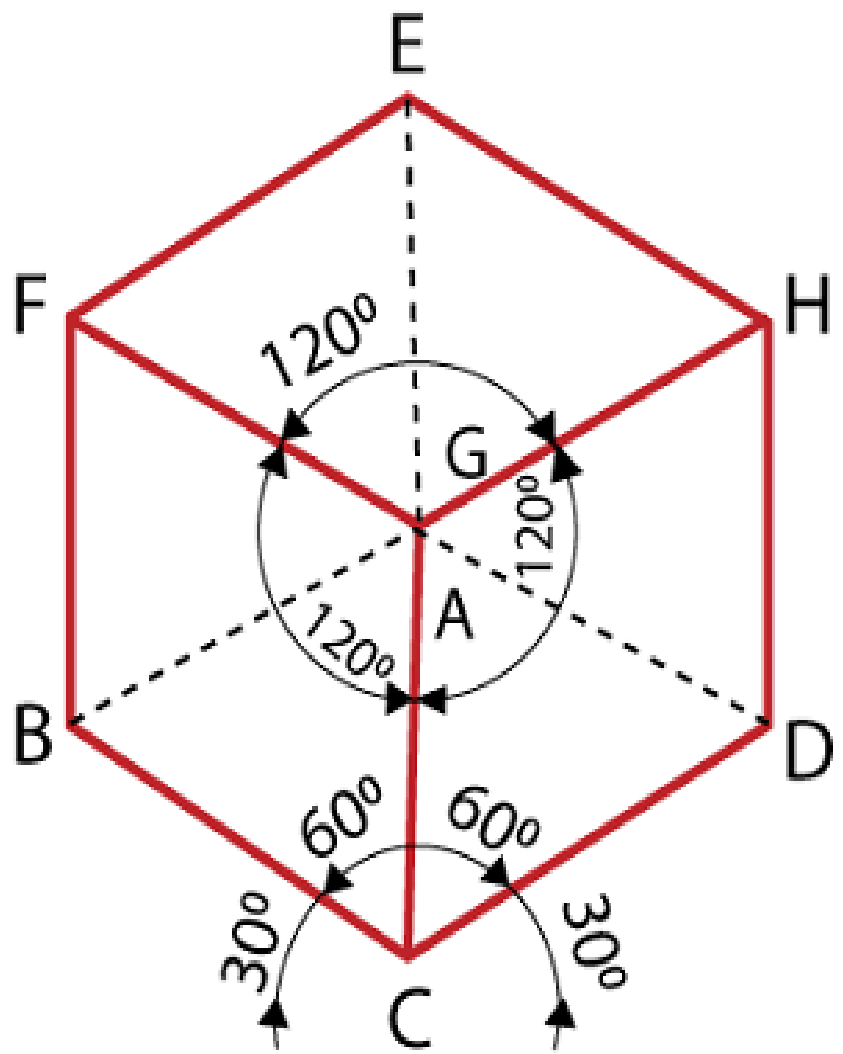

2. Dimetric: In Dimetric Projection, the view direction of the two axes are equal, and the direction of the third axis is defined individually.

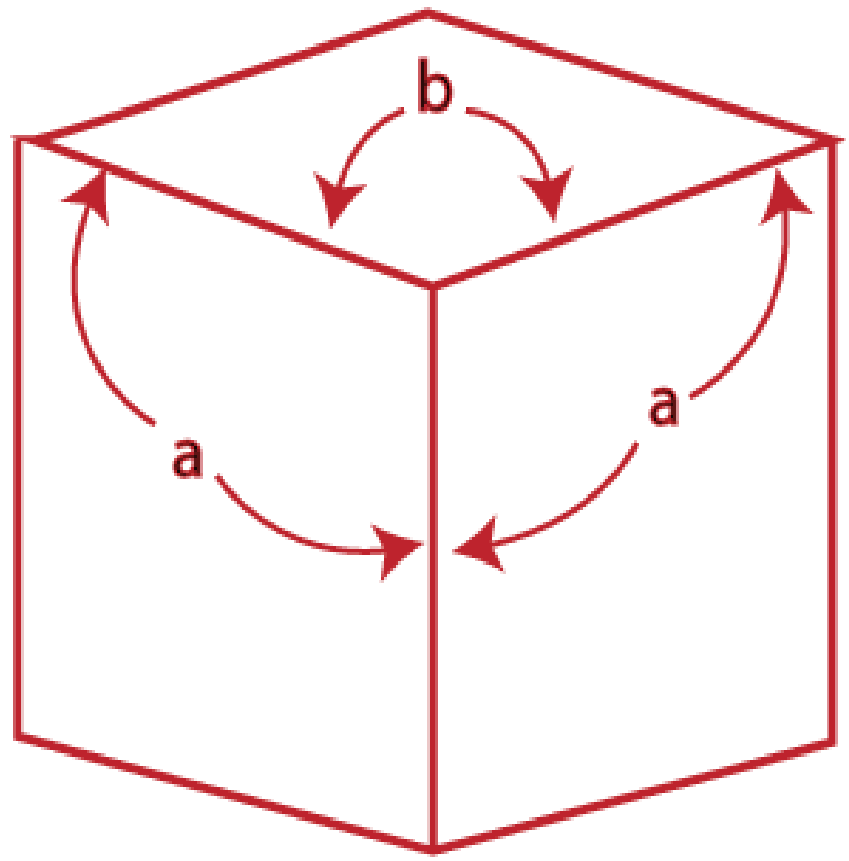

Dimetric

3. Trimetric: In the Trimetric Projection, the view direction of all three axes is unequal. The scale of all three angles is defined individually.

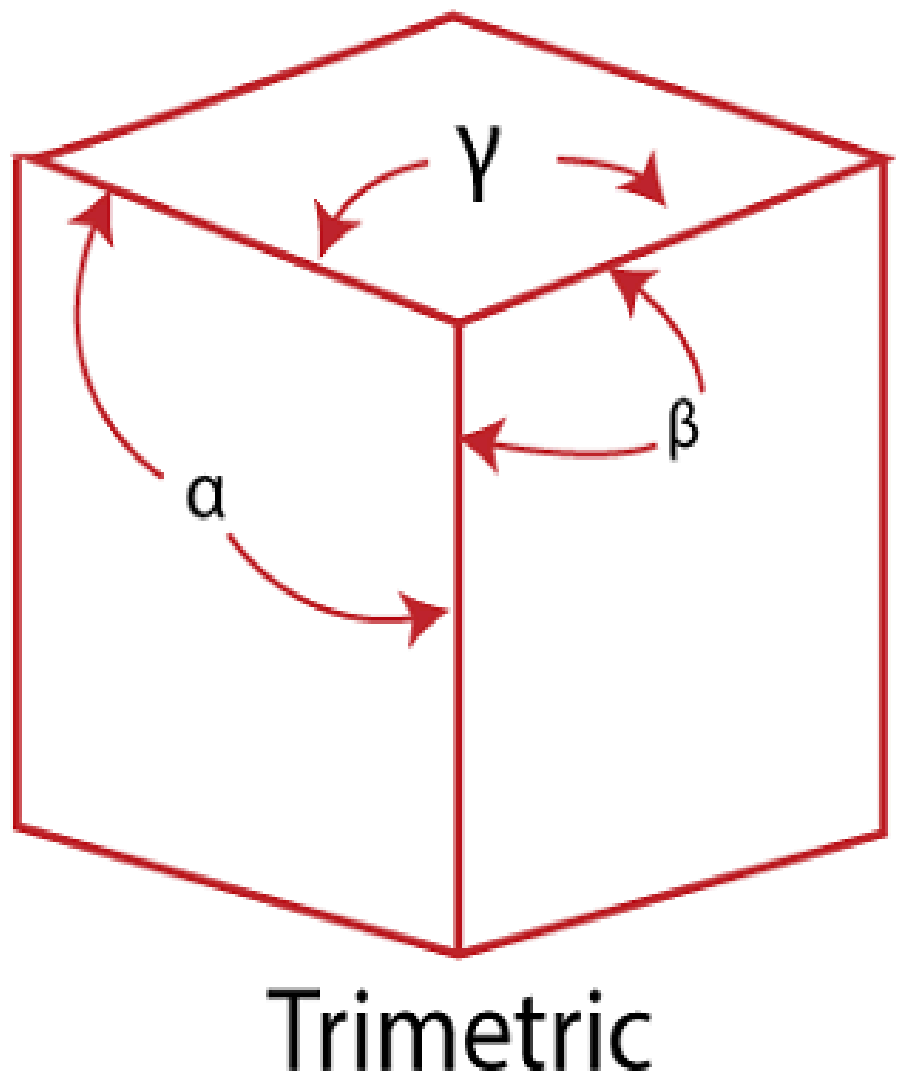

Transformation equations for an Orthographic Projection

- If the view plane is placed at position z_{vp} along the z_v axis, then any point *(x, y,* z) in viewing coordinates is transformed to projection coordinates as

$$x_p = x \qquad\qquad y_p = y$$

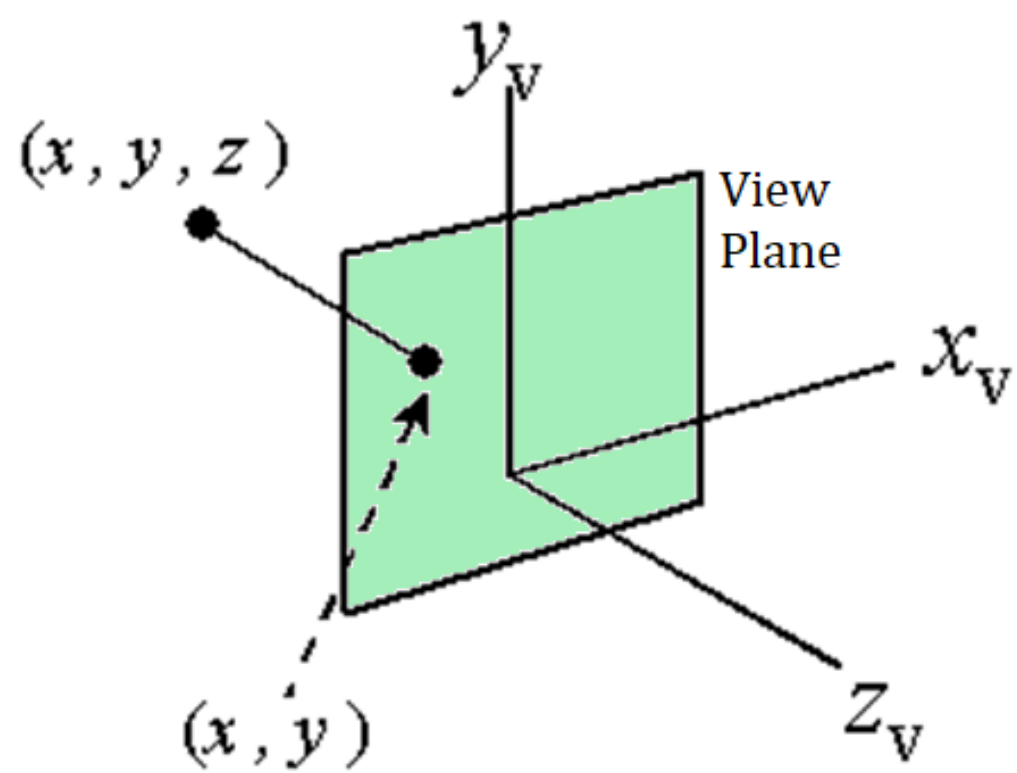

Oblique Projections

- The projectors make an angle with the projection plane.

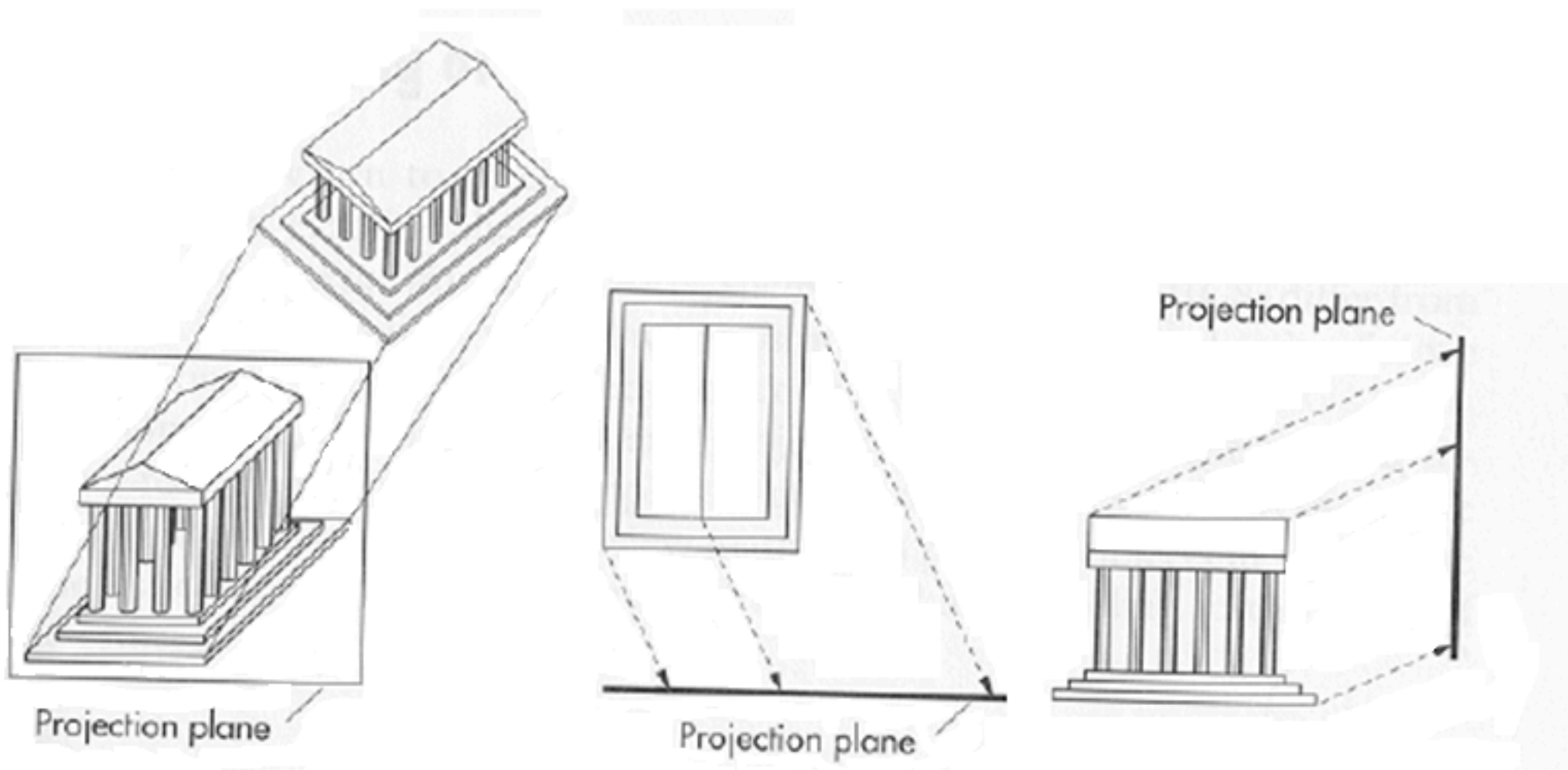

- In the Oblique Parallel Projection, the direction of projection is not normal to projection of plane.
- It is a simple technique that is used to construct two-dimensional images of three-dimensional objects.
- The Oblique Projection is mostly used in technical drawing.

Transformation equations for oblique projection

- The oblique projection line from *(x, y, z)* to *(xp, yp)* makes an angle α with the line on the projection plane that joins *(xp, yp,)* and *(x, y)*. This line, of length L, is at an angle Ø with the horizontal direction in the project

$$x_p = x + L\,cos\emptyset$$

$$y_p = y + L\,sin\emptyset$$

- Length L depends on the angle α and the z coordinate of the point to be projected

$$\tan\alpha = \frac{z}{L}$$

$$L = \frac{z}{\tan\alpha} = zL_1$$

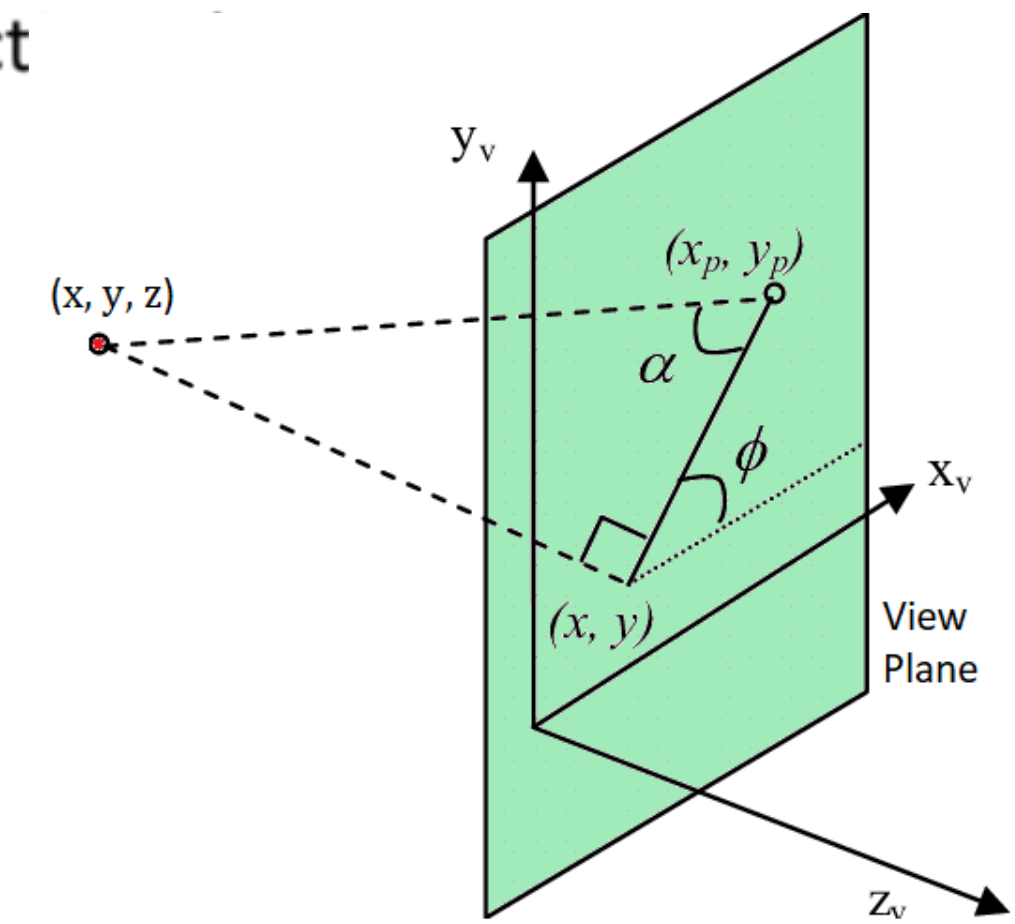

Transformation equations for oblique projection

- Rewrite the equations:

$$x_p = x + z(L_1 \cos\emptyset)$$
$$y_p = y + z(L_1 \sin\emptyset)$$

The transformation matrix can be written as:

$$\begin{bmatrix} 1 & 0 & L_1\cos\emptyset & 0 \\ 0 & 1 & L_1\sin\emptyset & 0 \\ 0 & 0 & 0 & 0 \\ 0 & 0 & 0 & 1 \end{bmatrix}$$

Oblique projections

- There are two kinds of oblique projections:
  - Cavalier projection
  - Cabinet projection

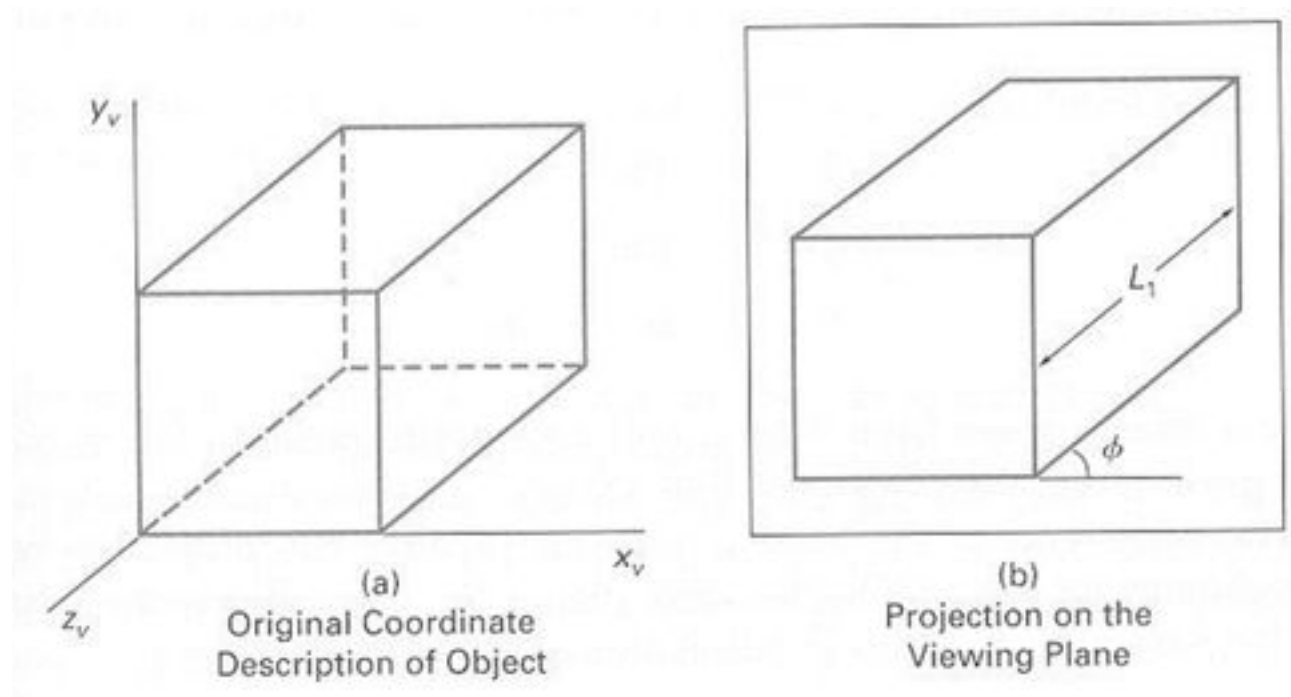

(a)
Original Coordinate
Description of Object

(b)
Projection on the
Viewing Plane

Cavalier Projection

- All lines perpendicular to the projection plane are projected with no change in length.
- $\alpha = 45°$
- Common choice for Ø is usually 30° or 45°

In cavalier Projection, there is an angle between the Projection and Projection Plane is 45 degrees.

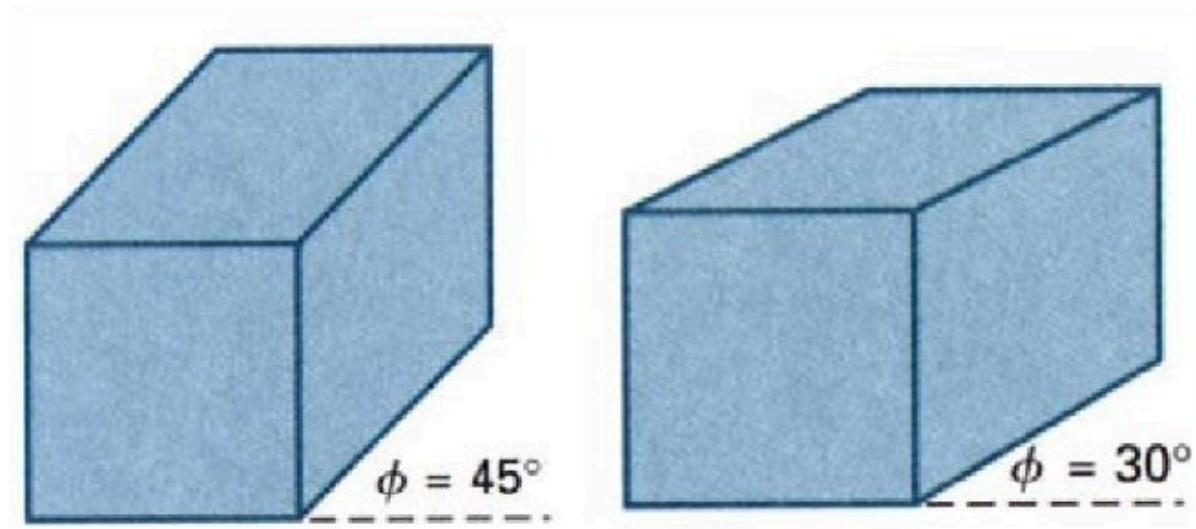

depth of the cube is projected equal to the width and the height

Cabinet Projection

- Lines which are perpendicular to the projection plane (viewing surface) are projected at ½ the length
- This results in foreshortening of the z axis, and provides a more “realistic” view than cavalier projections.
- α usually 63.4 degre

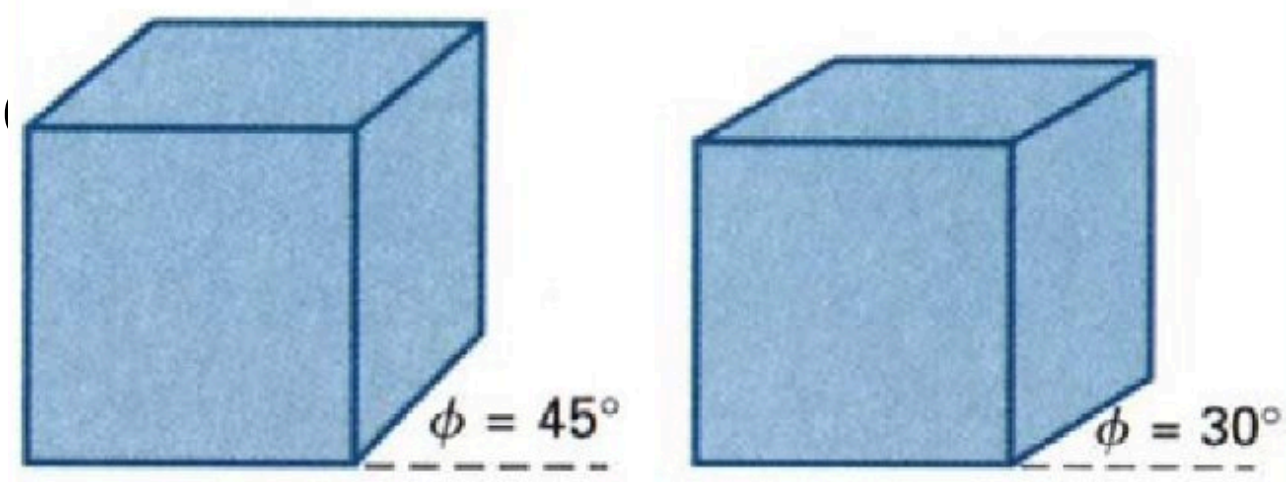

depth of the cube is projected as one-half that of the width and height

Transformation equations Perspective Projection

- Set projection reference point at z_{prp} along the z_v axis, and we place the view plane at z_{vp}
- A point on the projection line:

$$x' = x - xu$$
$$y' = y - yu$$
$$z' = z - (z - z_{prp})u$$

- Parameter u takes the value 0 to 1
- On the view plane $z' = zvp$

then $$u = \frac{z_{vp} - z}{z_{prp} - z}$$

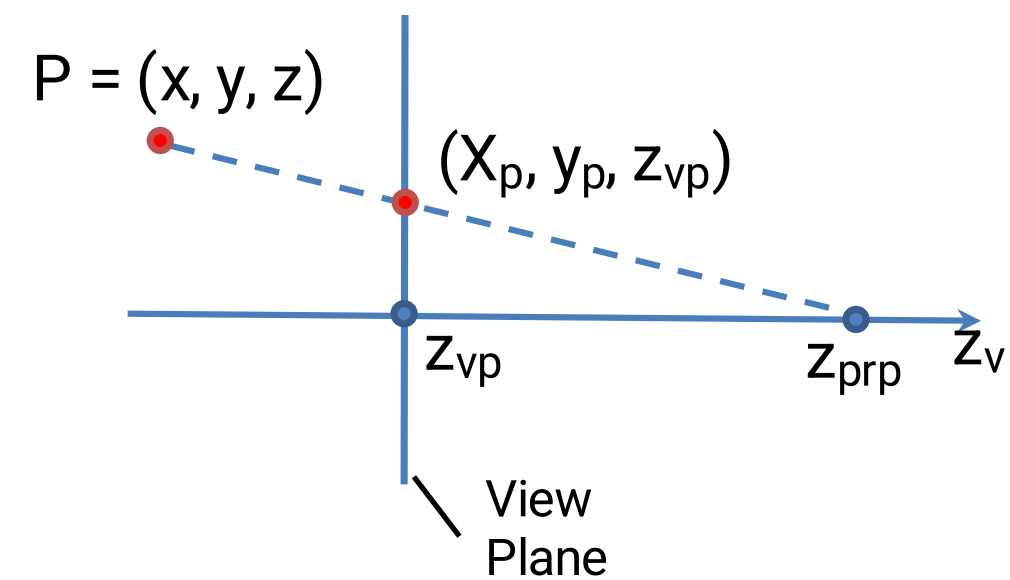

- Substituting u for a point on view plane

$$x_p = x\left(\frac{z_{prp} - z_{vp}}{z_{prp} - z}\right) = x\left(\frac{d_p}{z_{prp} - z}\right)$$

$$y_p = y\left(\frac{z_{prp} - z_{vp}}{z_{prp} - z}\right) = y\left(\frac{d_p}{z_{prp} - z}\right)$$

Where $d_p = z_{prp} - z_{vp}$ is the distance of the view plane from the projection reference point.

Different types of projection

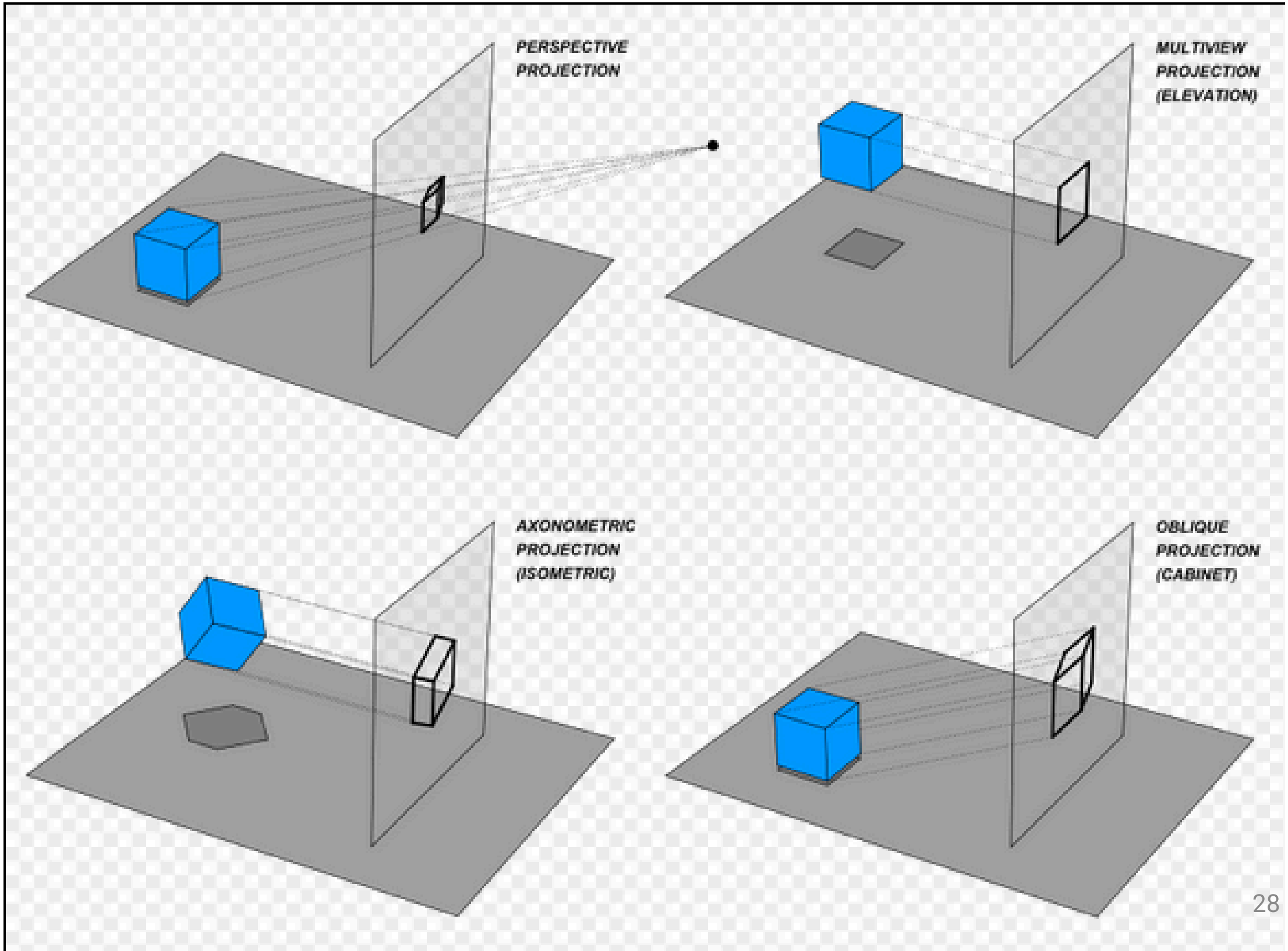

Vanishing Point

- When a 3D object is projected onto view plane using perspective transformation equations, any set of parallel lines in the object that are not parallel to the projection plane, converge at a **vanishing point**.
- Each set of projected parallel lines will have a separate vanishing point.
- A scene can have any number of vanishing points depending on sets of parallel lines in a scene.

- Vanishing point can be defined as a point in image plane where all parallel lines are interlinked. The Vanishing point is also called **“Directing Point.”**

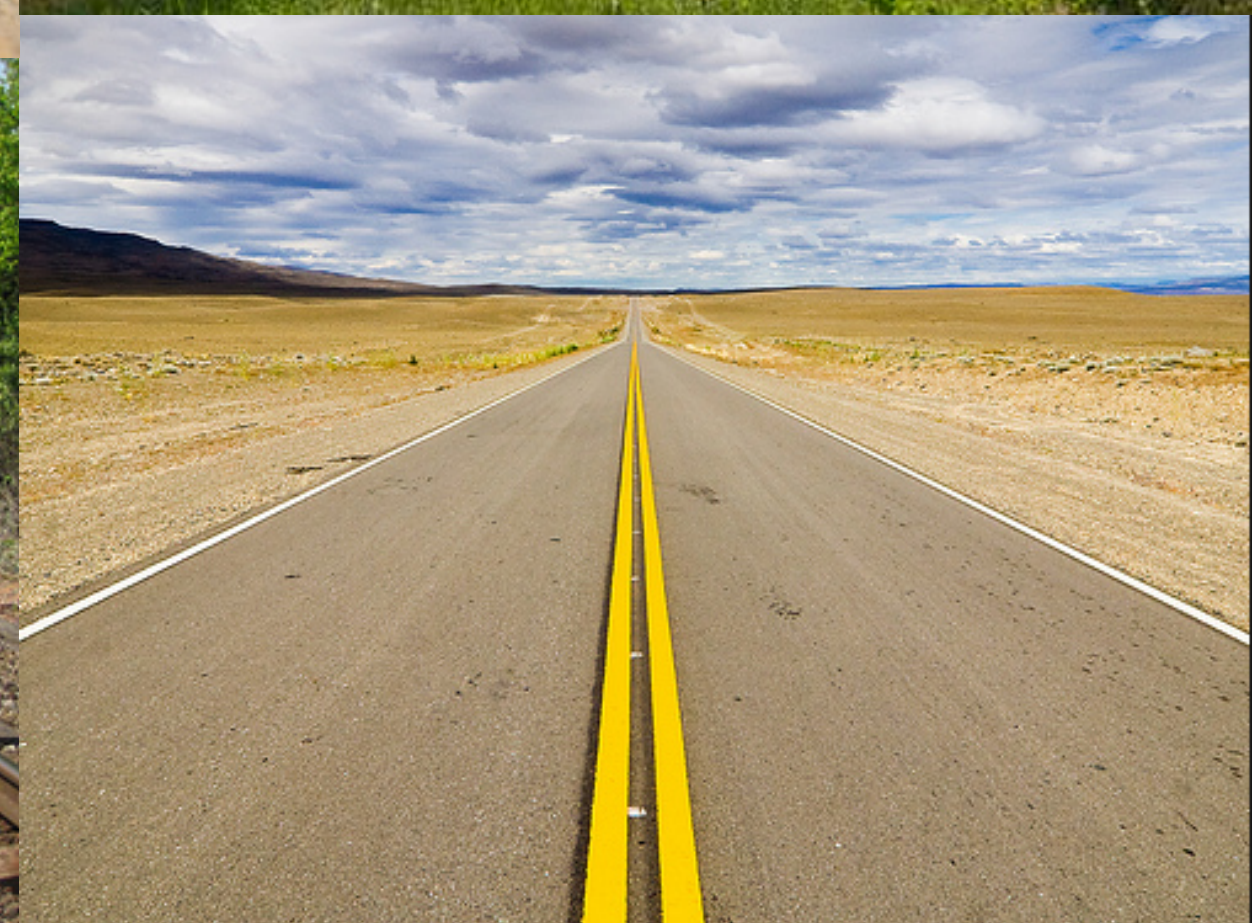

Vanishing Point

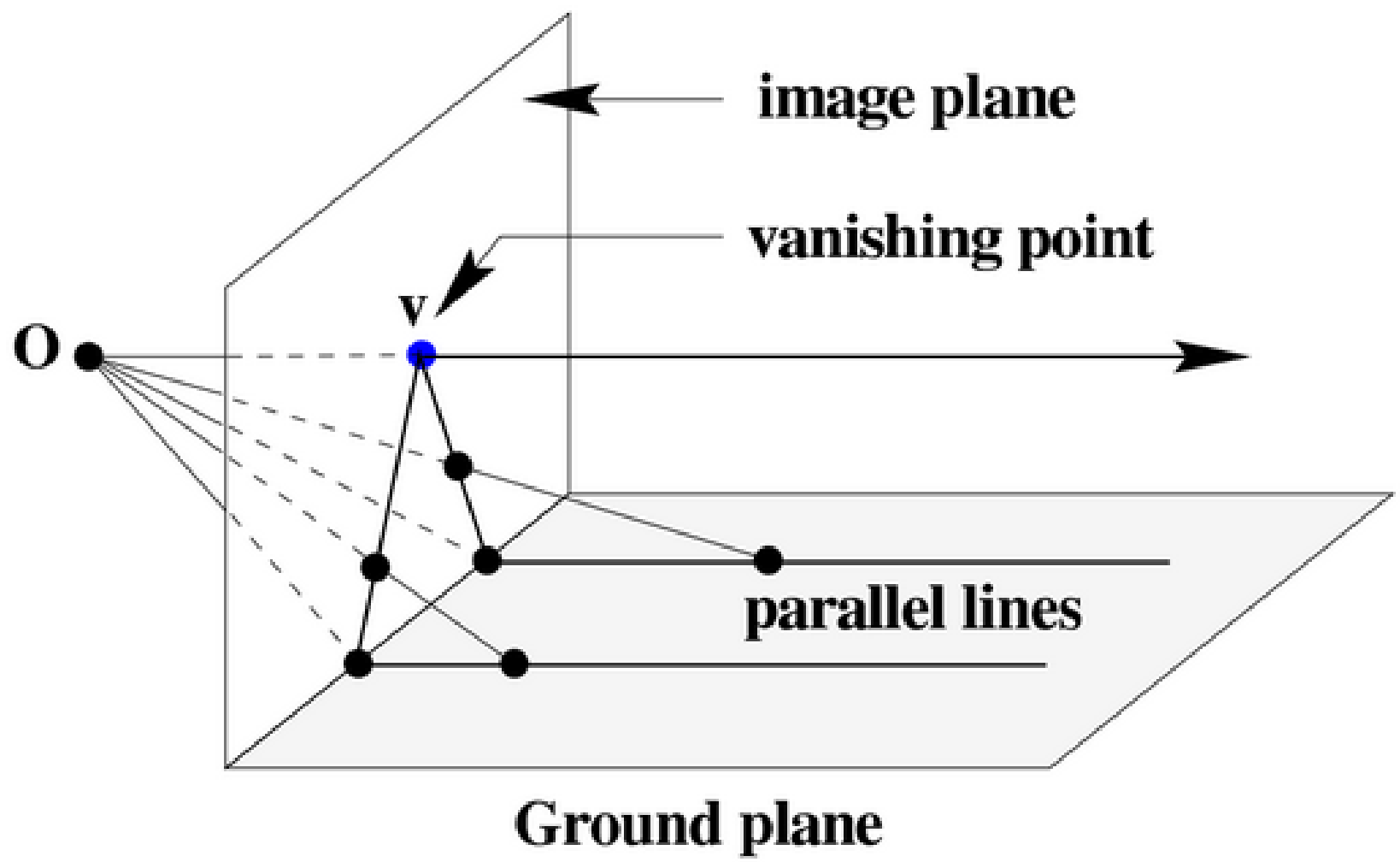

Vanishing Point

- If a set of lines are parallel to one of the three principle axes, the vanishing point is called an **principal vanishing point**.
- There are at most 3 such points, corresponding to the number of axes cut by the projection plane.
- The number of principal vanishing points is determined by the number of principal axes intersected by the view plane.

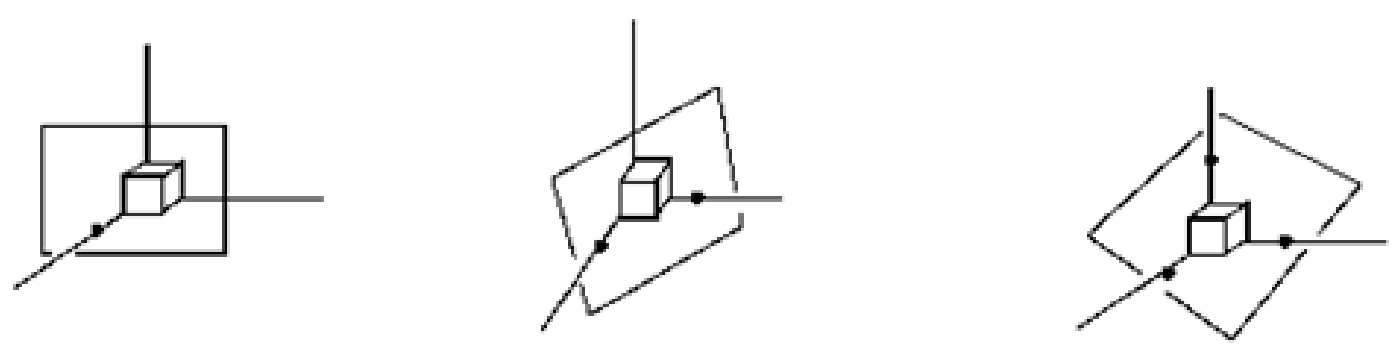

Classes of Perspective Projection

- We can control the number of principal vanishing points with the orientation of the projection plane & perspective projection are accordingly classified.
  - One-Point Perspective Projection
  - Two-Point Perspective Projection
  - Three-Point Perspective Projection
- Appearance of the object changes depending on these projections.

One-Point Perspective

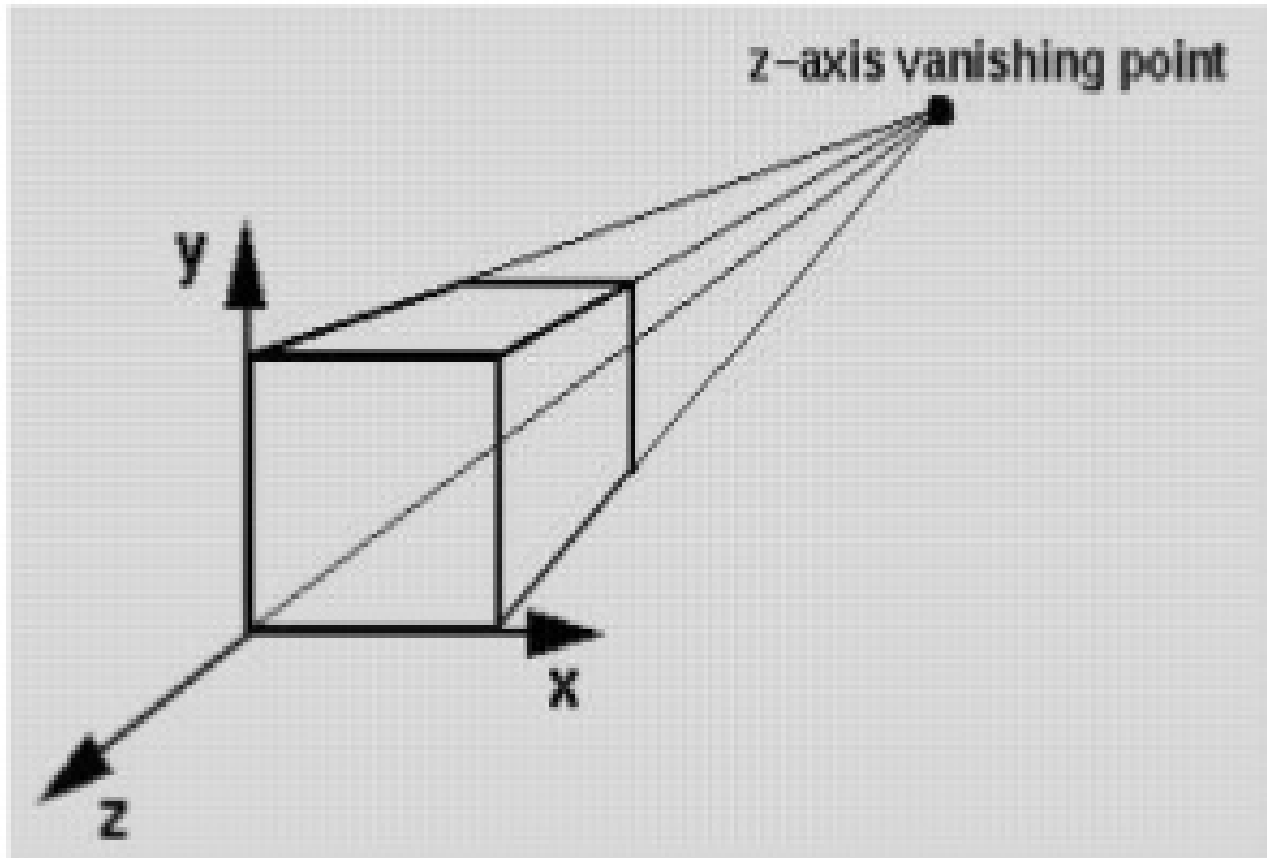

Two-Point Perspective

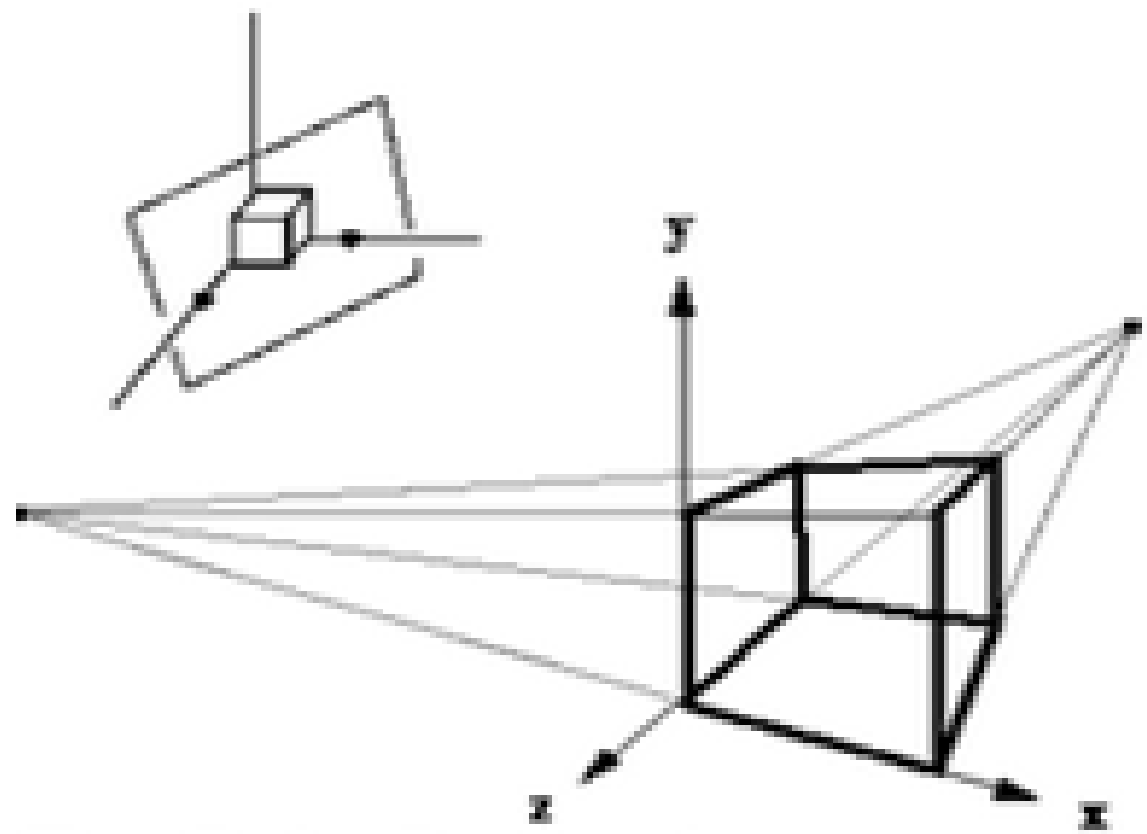

Two Point Perspective
z, and x-axis vanishing points

This is often used in architectural, engineering and industrial design drawings.

Three-Point Perspective

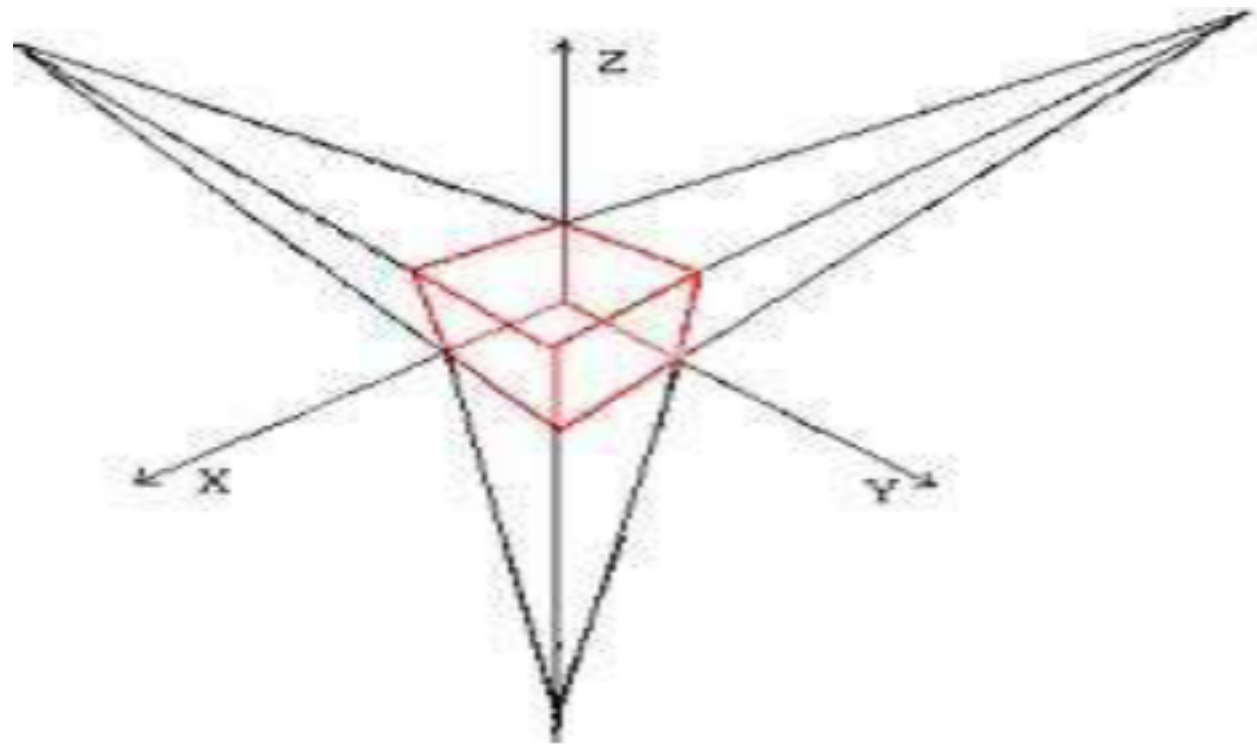

Three-point perspective projection is used less frequently as it adds little extra realism to that offered by two-point perspective projection

Vanishing Point

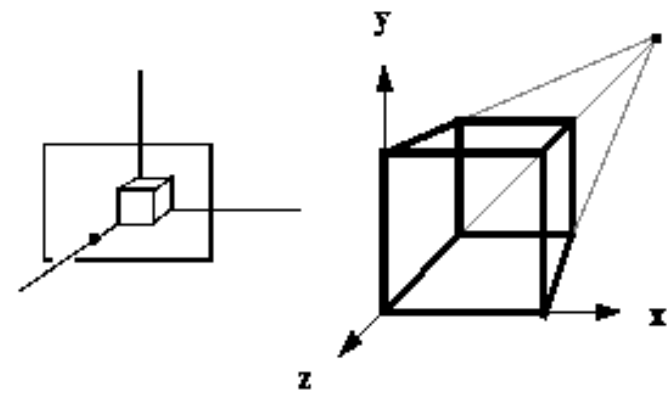

One Point Perspective
(z-axis vanishing point)

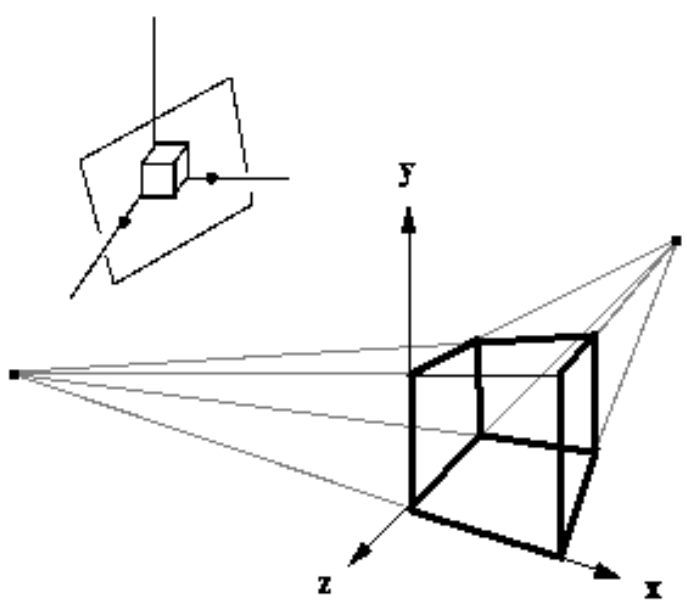

Two Point Perspective
z, and x-axis vanishing points

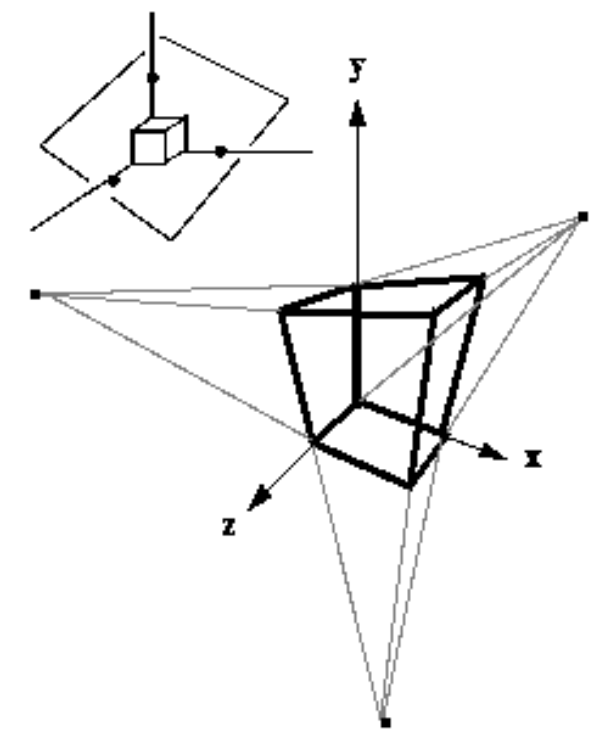

Three Point Perspective
(z, x, and y-axis
vanishing points)

Vanishing Point

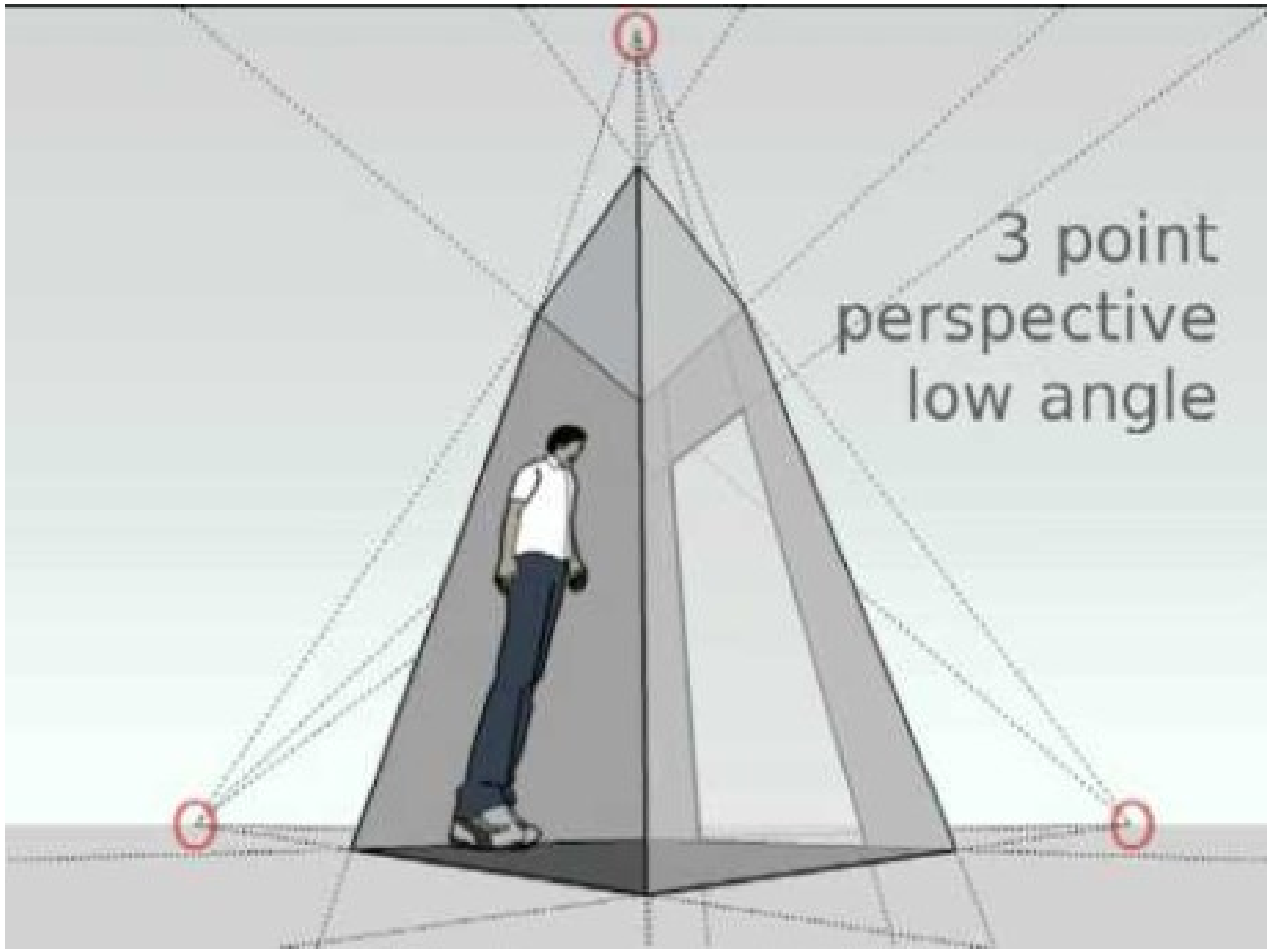
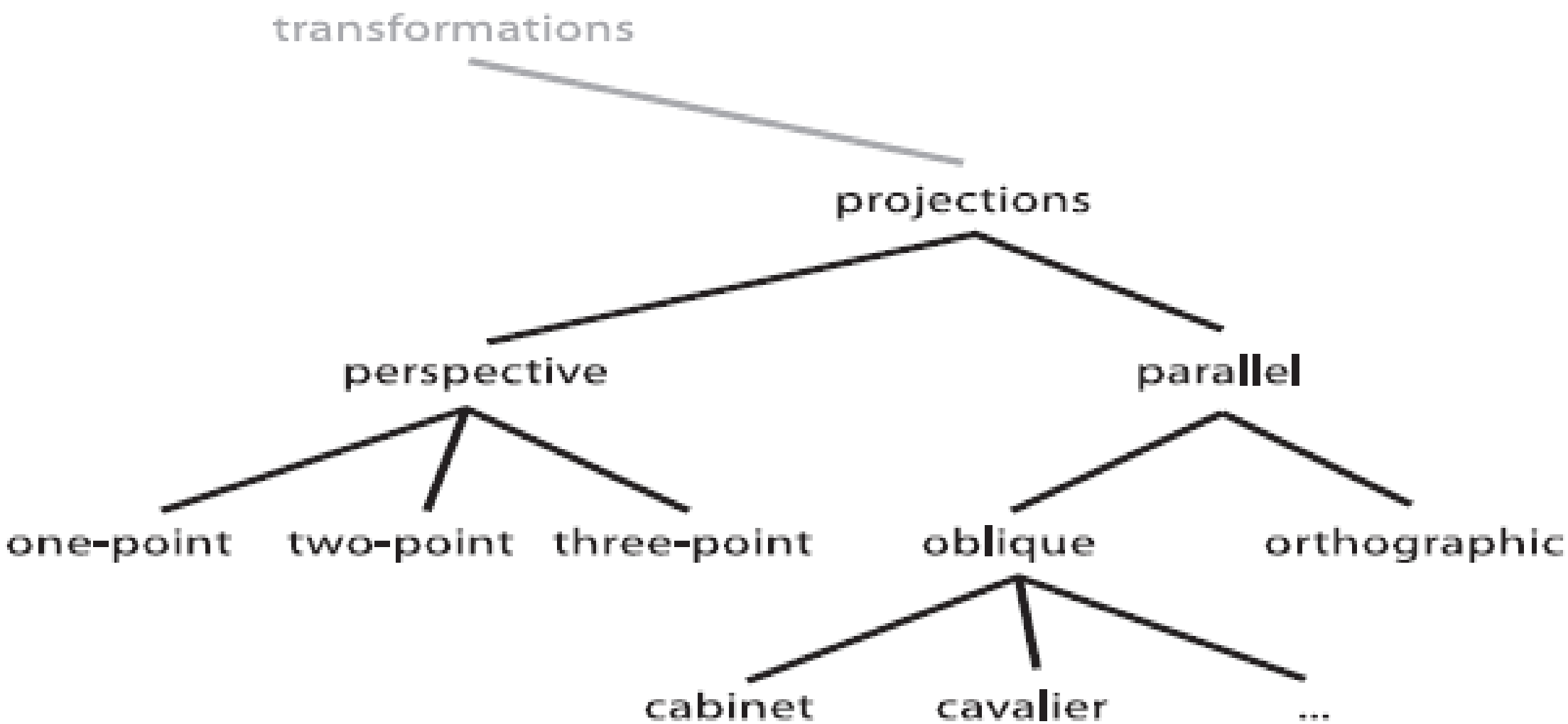
Projection taxonomy